REV	REVISION RECORD	DATE	NAME
0	NEW RELEASE	02-23-09'	EMILY

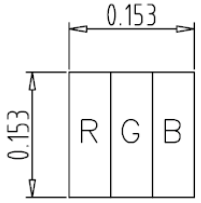

A Block

1	AR_VDD	22	ID_MIB	43	DOTCLK
2	AR_VSS	23	DB17	44	ENABLE
3	VCI	24	DB16	45	SDI
4	VCI1	25	DB15	46	SDO
5	GND	26	DB14	47	CSB
6	C12M	27	DB13	48	RW_WRB
7	C12P	28	DB12	49	RS
8	C11M	29	DB11	50	E_RDB
9	C11P	30	DB10	51	RESETB
10	VLOUT1	31	DB9	52	MVDD
11	C31P	32	DB8	53	VREG1OUT
12	C31M	33	DB7	54	VCI
13	C32P	34	DB6	55	VGH
14	C32M	35	DB5	56	VGL
15	VLOUT3	36	DB4	57	GND
16	VLOUT2	37	DB3	58	X−
17	C21P	38	DB2	59	Y−
18	C21M	39	DB1	60	X+
19	VGS	40	DB0	61	Y+
20	IOVCC	41	VSYNC		
21	SPB	42	HSYNC		

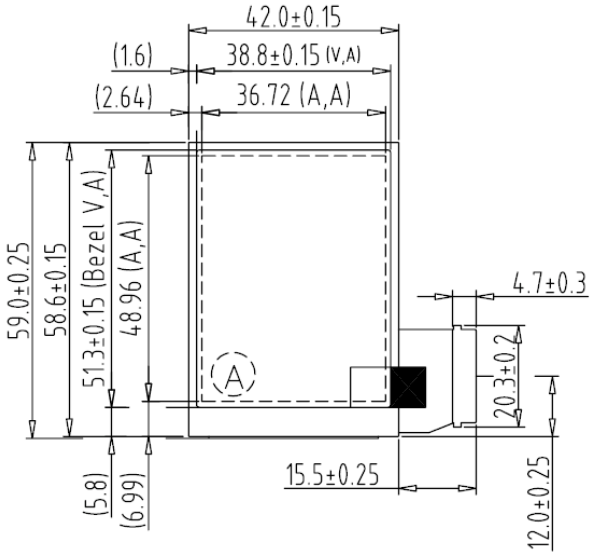

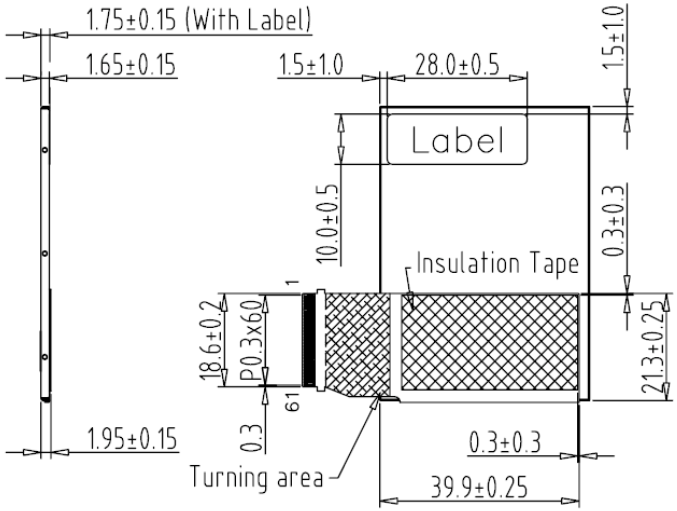

Back View

Note:
1. Unless indicated, Tolerance Grade "B" is adopted.
2. UV Glue For OLB Protection.
3. Connector : HIROSE FH26-61S-0.3SHW

1	2.4" OLED	7		TOLERANCE GRADE(±)	A	B	DIM. MM	DWN. EMILY	DATE 02-23-09'	TITLE 240320V (2.4" OLED)	
2		8		~6	0.05	0.1					
3		9		6~18	0.08	0.18	IE NO.	CHK.	DATE		
4		10		18~50	0.1	0.25					
5		11		50~180	0.2	0.4	PARTS NO. LCM 240320V	APPD.	DATE	DWG. NO. *090239MA	SHEET 1 OF 1
6		12		180~	0.3	0.5					

AMPIRE 晶采光電科技